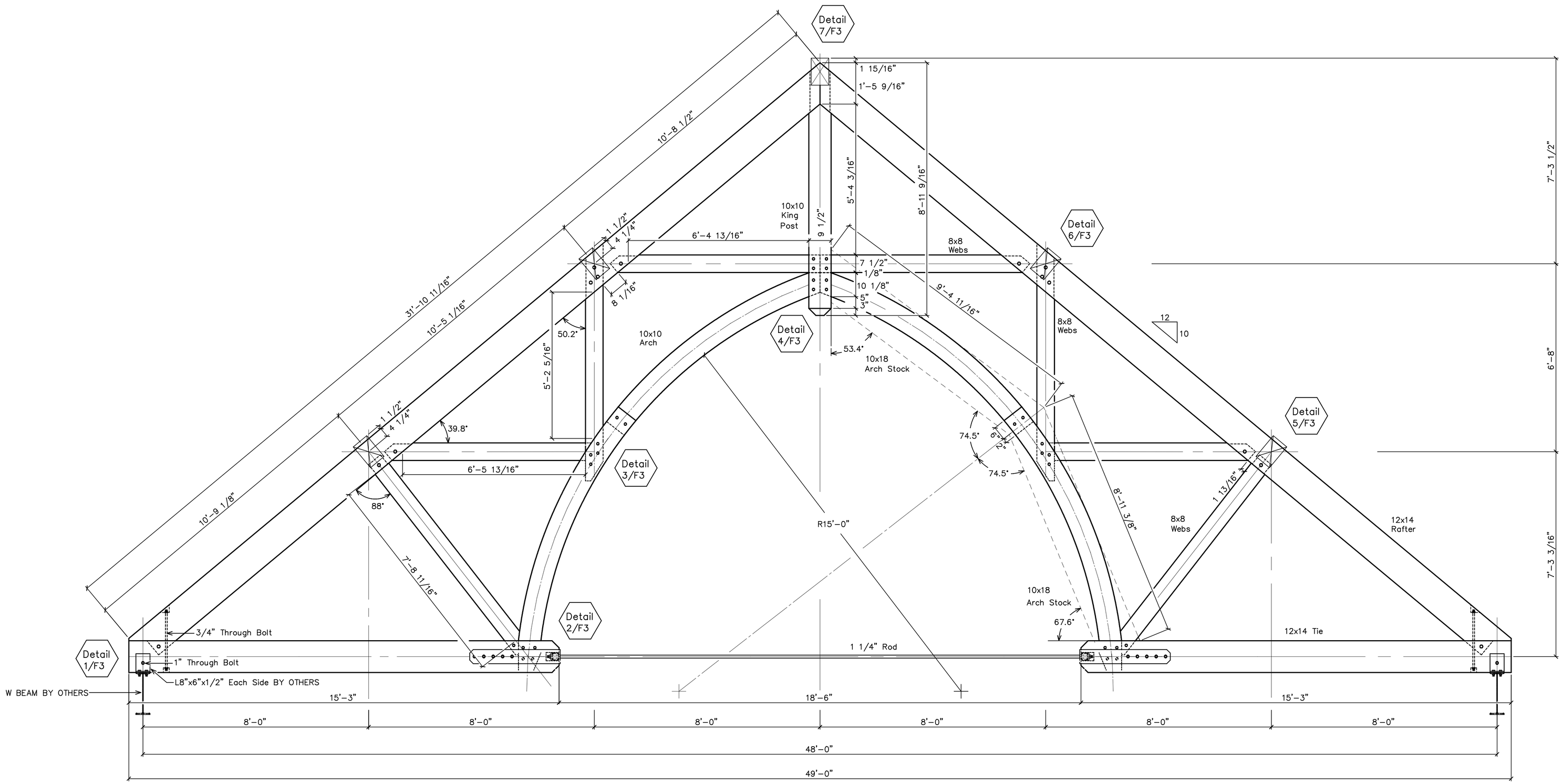

Truss AT1 – 8 Required

GENERAL NOTES:

TIMBERS TO BE DOUGLAS FIR SELECT STRUCTURAL S4S
PEGS TO BE BIRCH, 1" DIA OR AS NOTED.
EDGES AS SPECIFIED TO HAVE 1/2" CHAMFER
ONE COAT OF URETHANE TO BE SHOP APPLIED
ON ALL SIDES.
ALL BOLTS TO BE ZINC COATED.
ALL STEEL TO BE SHOP PRIMED FLAT BLACK.

REVISIONS	BY
2/4/02	
2/7/02	

VERMONT TIMBER WORKS
SPRINGFIELD VERMONT
802-885-1917

SHOP DRAWINGS
Truss Profile
GENERAL NOTES

Dufresne–Henry
North Springfield, VT
802–886–2261
802–886–2260 Fax
www.dufresne–henry.com

PROJECT: Immaculate Conception Church
Nasua, New Hampshire

DRAWN : D.F.	CHECKED :
DATE : 1/8/02	
SCALE : 1/2"=1'–0"	
JOB NO. :	
SHEET F–2	
OF	SHEETS