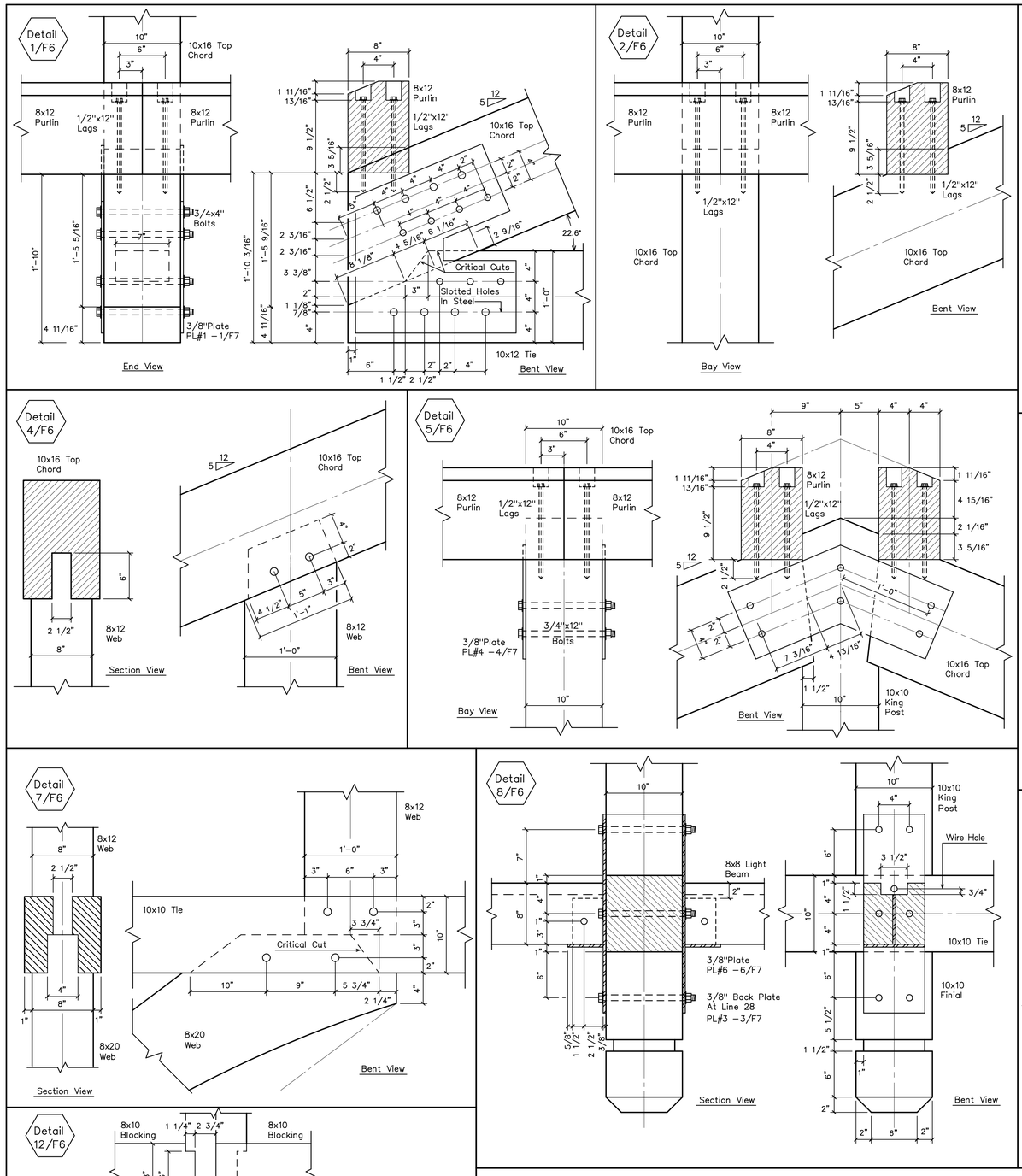

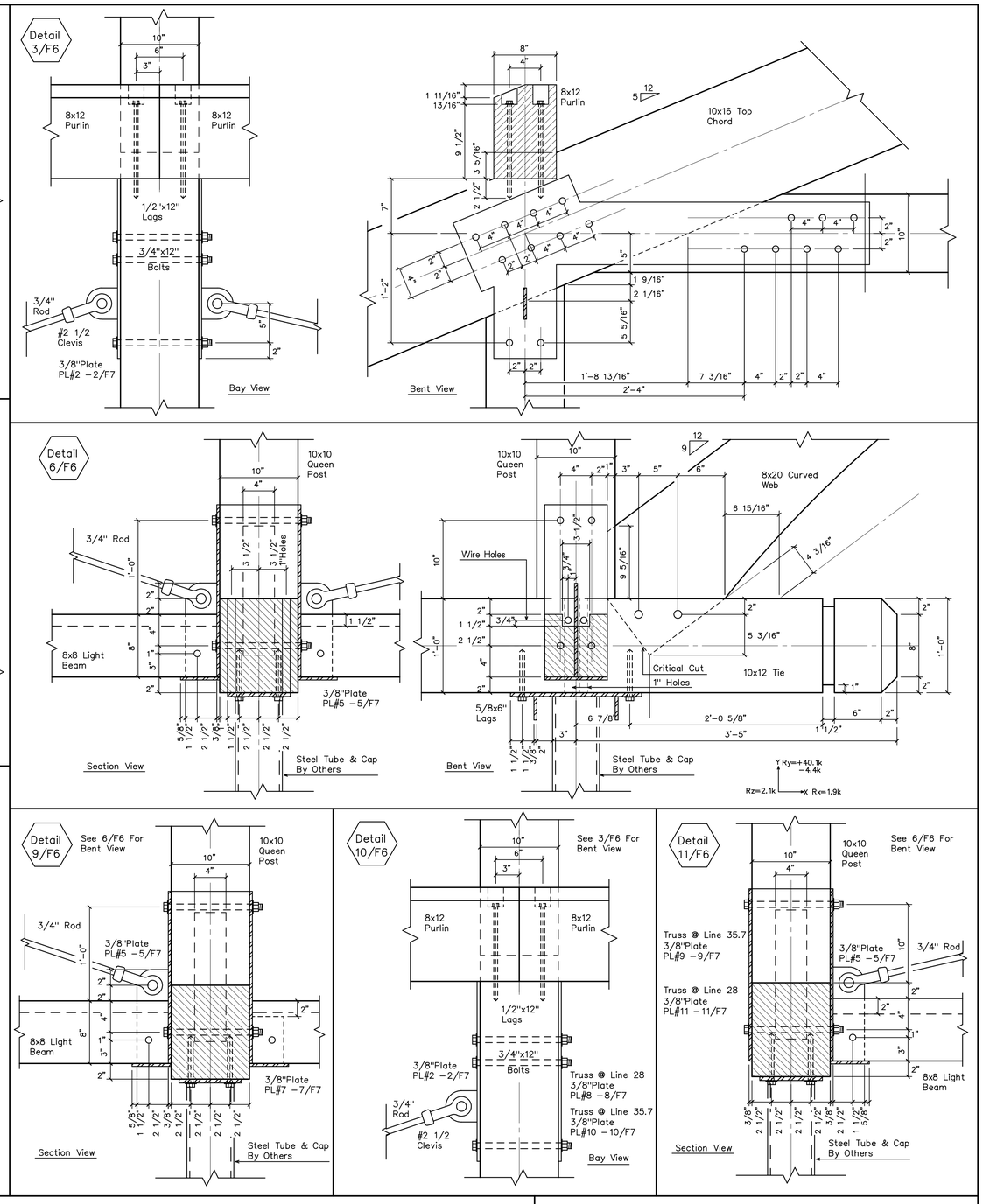

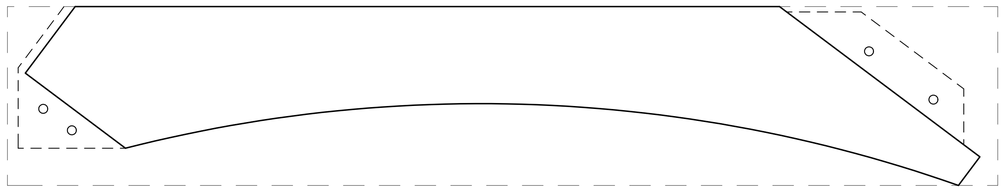

Note: Face all nuts West—toward the hotel, away from the porte cochere.

REVISIONS	BY
4/12/06	
5/1/06	
6/15/06	
RED LINE CHECK	
BY:	DATE:

VERMONT TIMBER WORKS
N. SPRINGFIELD VERMONT
802-886-1917

SHOP DRAWINGS

Lobby Details

PROJECT: Double Tree Hotel
Tarrytown, NY

DRAWN : D.F.	CHECKED :
DATE : 3/30/06	
SCALE : 1 1/2"=1'-0"	
JOB NO. :	
SHEET F-6	
OF	SHEETS