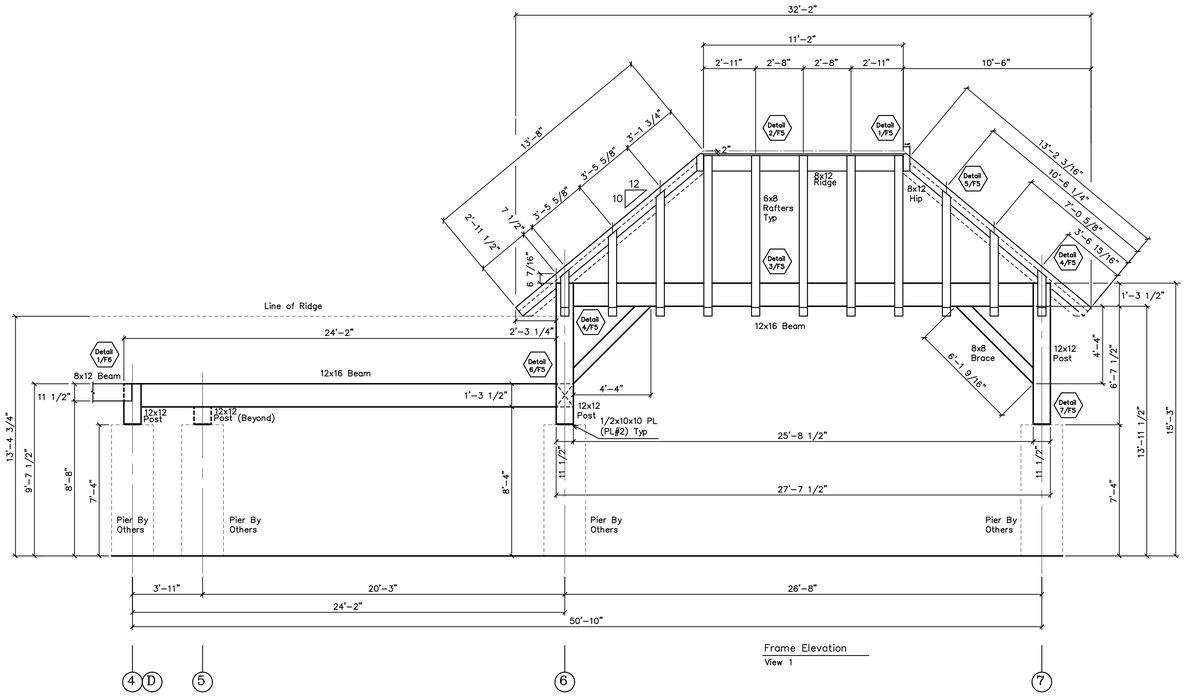

Frame Elevation
View 1

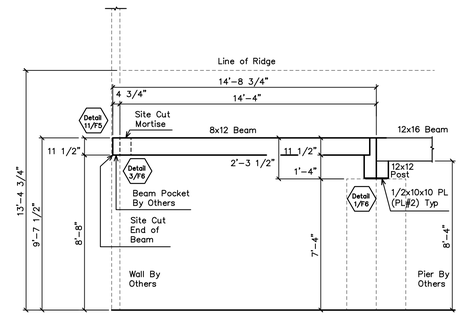

Frame Elevation
View 2

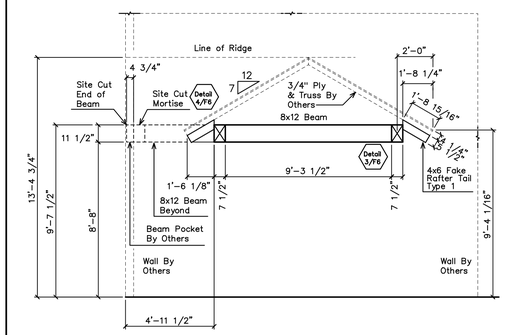

Frame Elevation
View 3

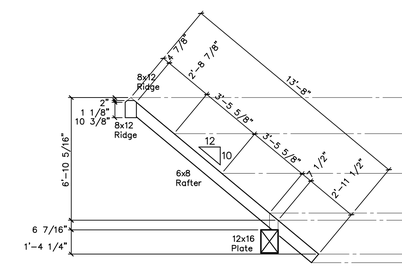

Frame Elevation
Common Rafter

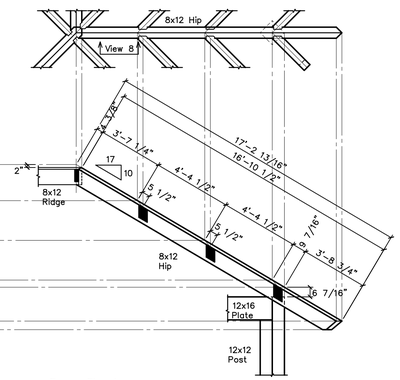

Frame Elevation
View 8

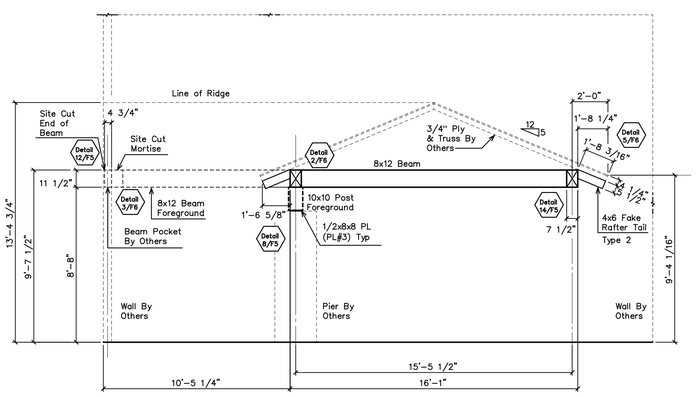

Frame Elevation
View 4

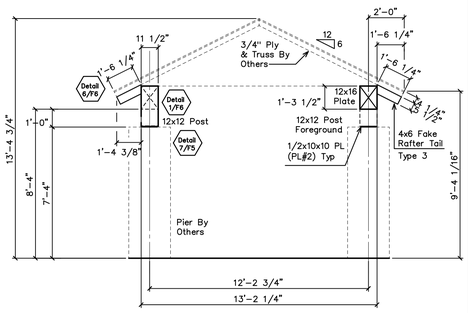

Frame Elevation
View 5

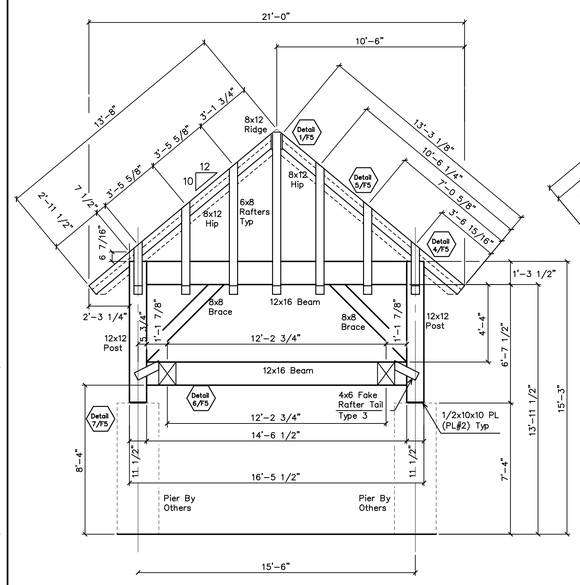

Frame Elevation
View 6

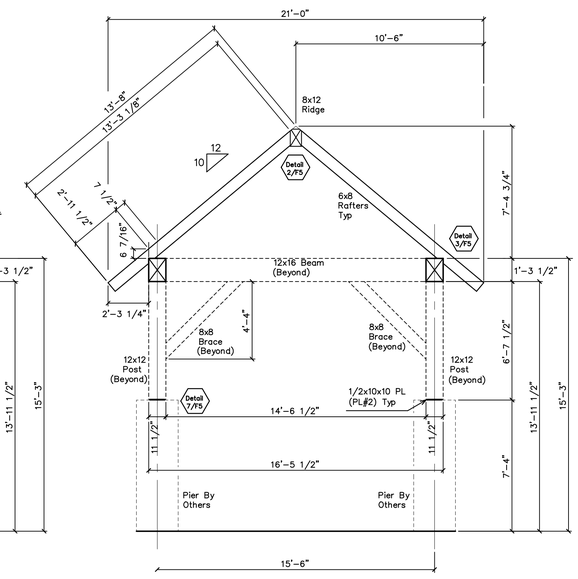

Frame Elevation
View 7

REVISIONS	BY
6/05/06	PJZ

RED LINE CHECK
BY: DATE:

VERMONT TIMBER WORKS
N. SPRINGFIELD VERMONT
802-886-1917

SHOP DRAWINGS

Plan & Profiles

THE ENGINEERING ADVICE, OPINIONS, AND RECOMMENDATIONS IN THIS DRAWING ARE THOSE OF THE LICENSED PROFESSIONAL ENGINEER WHOSE STAMP APPEARS HEREIN, AND NOT OF VERMONT TIMBER WORKS, INC.

PROJECT:

Founders Lodge
Stratton, VT
Porte Cochere

DRAWN : D.F.
CHECKED :
DATE : 5/12/06
SCALE : 1/4"=1'-0"
JOB NO. :
SHEET F-4
OF SHEETS

COPYRIGHT VERMONT TIMBER WORKS, INC.
THIS DRAWING MAY BE UTILIZED ONLY FOR THE WORK SHOWN THEREIN AT THE SITE SPECIFIED. ANY OTHER USE OF THIS DRAWING, INCLUDING, WITHOUT LIMITATION, ANY REPRODUCTION OF THE DESIGN OF THIS DRAWING WITHOUT THE PRIOR WRITTEN APPROVAL OF VERMONT TIMBER WORKS, INC. IS A VIOLATION OF LAW AND PROHIBITED.