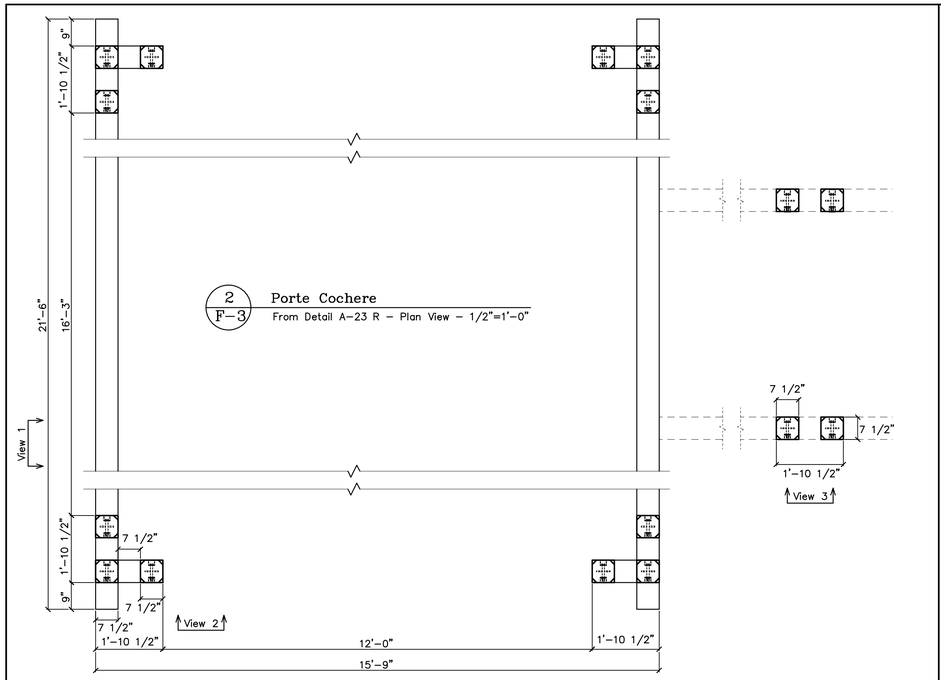

2 / F-3 Porte Cochere
From Detail A-23 R - Plan View - 1/2"=1'-0"

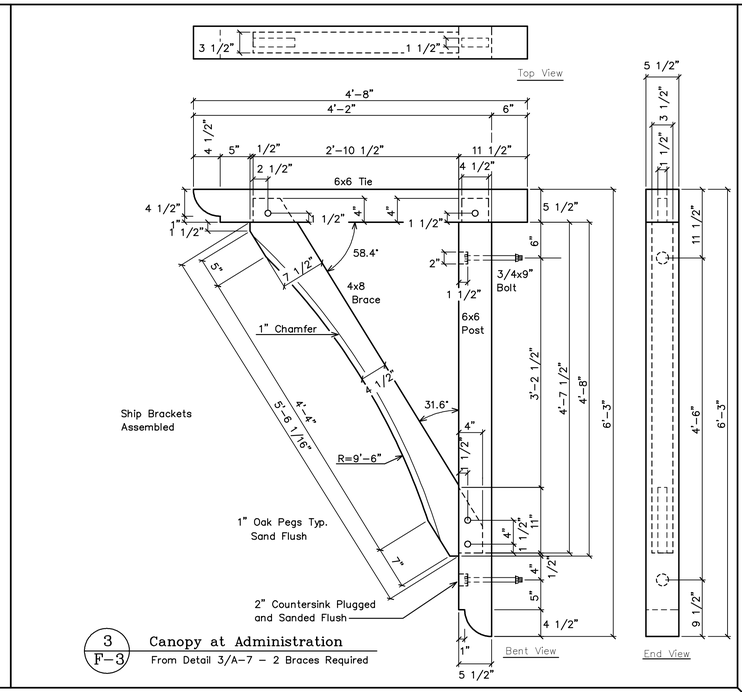

3 / F-3 Canopy at Administration
From Detail 3/A-7 - 2 Braces Required

General Notes:

Timbers to be Douglas Fir #1 & Better FOHC S4S
Pegs to be 1" Oak.
All edges to have 1/2" chamfer or as noted
One coat of sealer to be shop applied on all sides.
All Bolts to be 3/4" zinc coated.

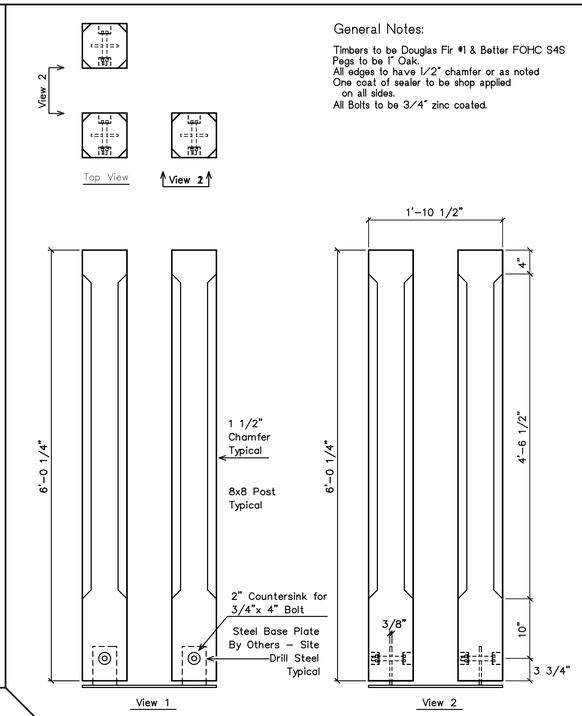

4 / F-3 Posts @ Parish HL Canopy
From Detail 4/A-23 - 6 Required Total - 1"=1'-0"

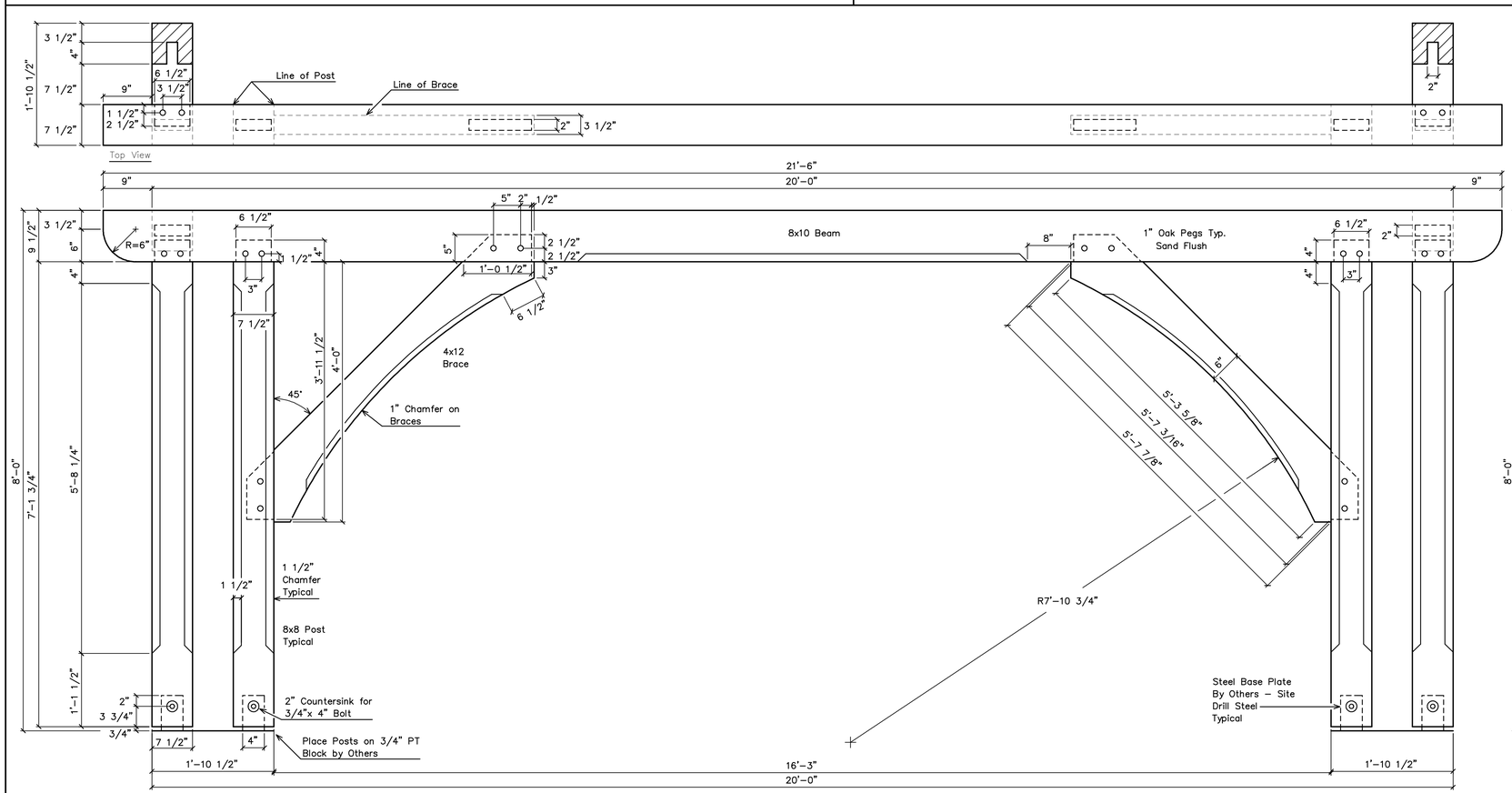

1 / F-3 Porte Cochere - View 1
From Detail A-23 R - Plan View - 1"=1'-0"

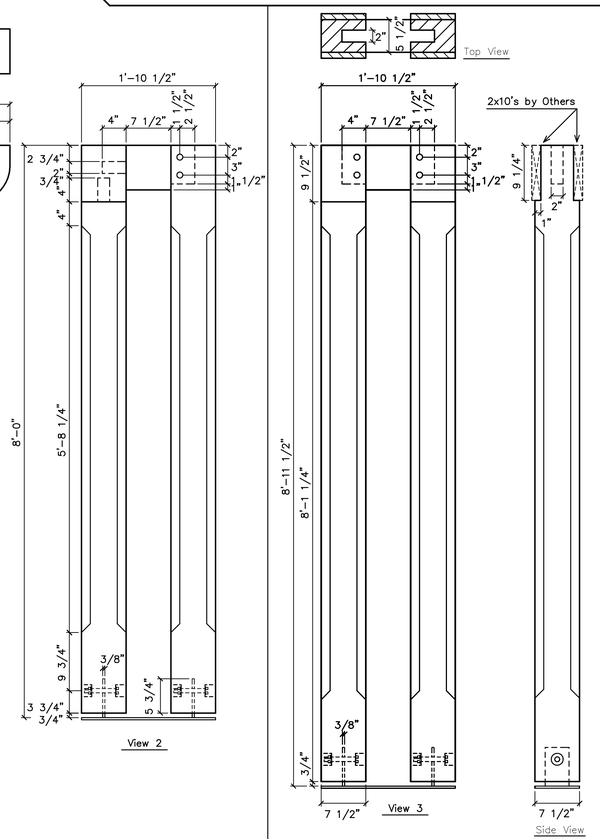

REVISIONS	BY
5/29/01	

VERMONT TIMBER WORKS
SPRINGFIELD VERMONT
802-885-1917

SHOP DRAWINGS

PROJECT:
Our Lady of the Mountains
North Conway, New Hampshire

DRAWN : D.F.	CHECKED :
DATE : 5/4/01	
SCALE : 1/4"=1'-0"	
JOB NO. :	
SHEET F-3	
OF	SHEETS