PLOT DATE 11/16/01

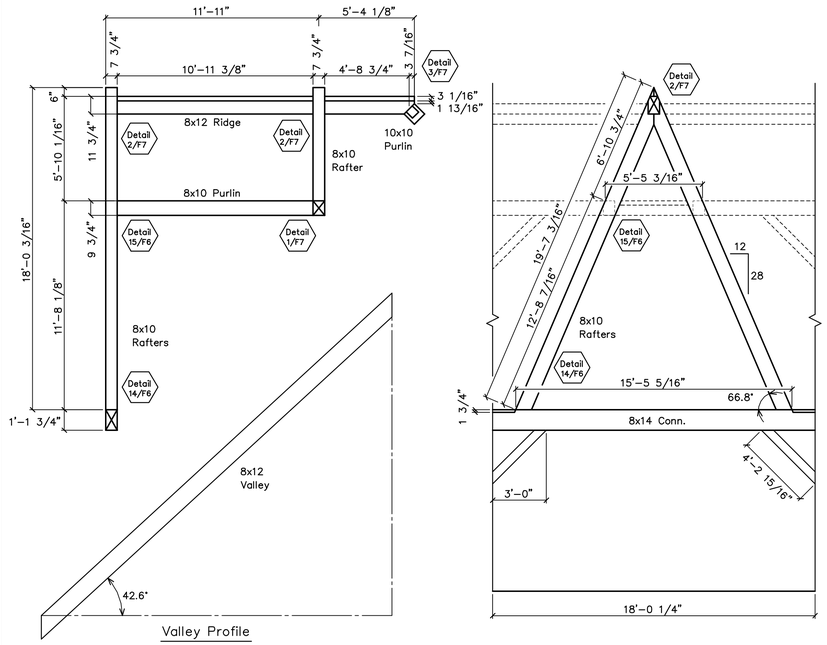

Large Dormer Profile

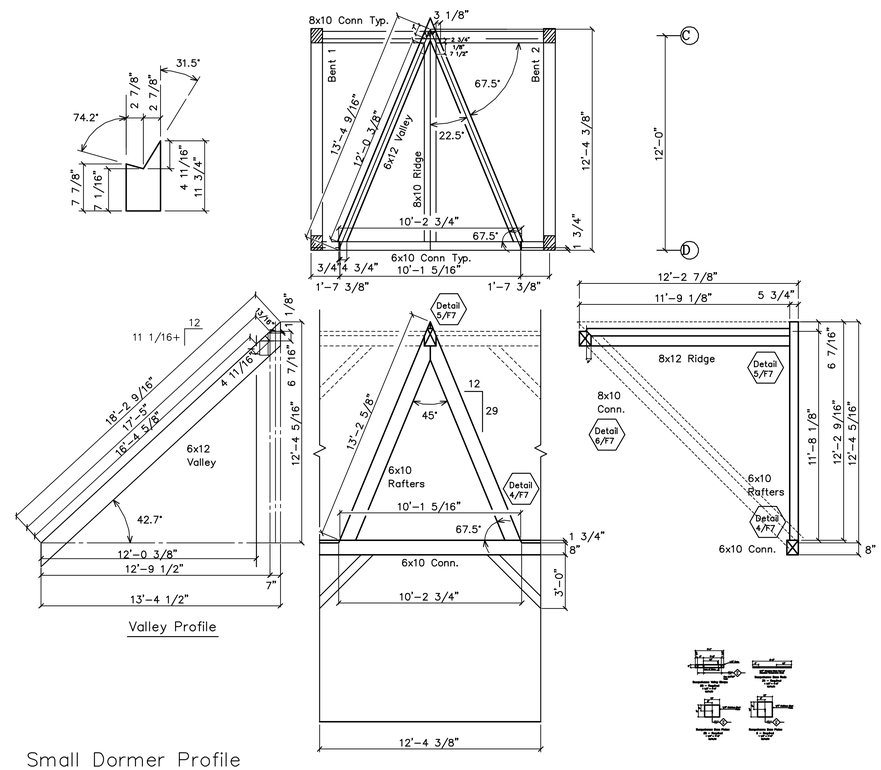

Small Dormer Profile

GENERAL NOTES:

TIMBERS TO BE EASTERN WHITE PINE #2 UNLESS OTHERWISE NOTED
PEGS TO BE 1" BIRCH.
ONE COAT OF STAIN, OIL OR URETHANE TO BE SHOP APPLIED ON ALL SIDES.
ALL BOLTS TO BE 3/4" ZINC COATED.
ALL STEEL TO BE SHOP PRIMED FLAT BLACK.

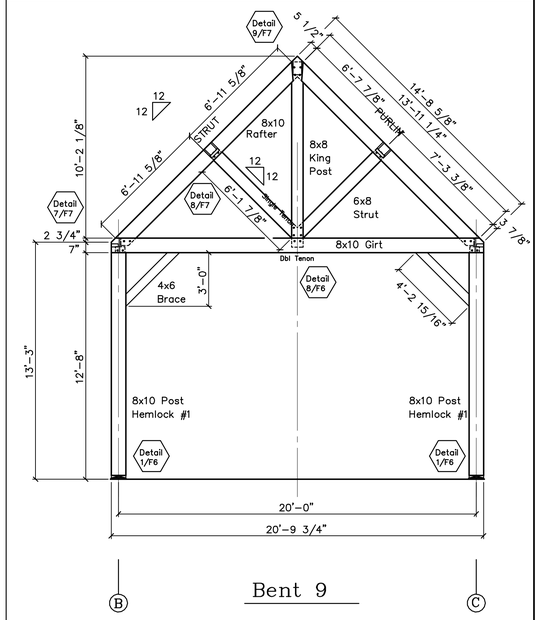

Bent 9

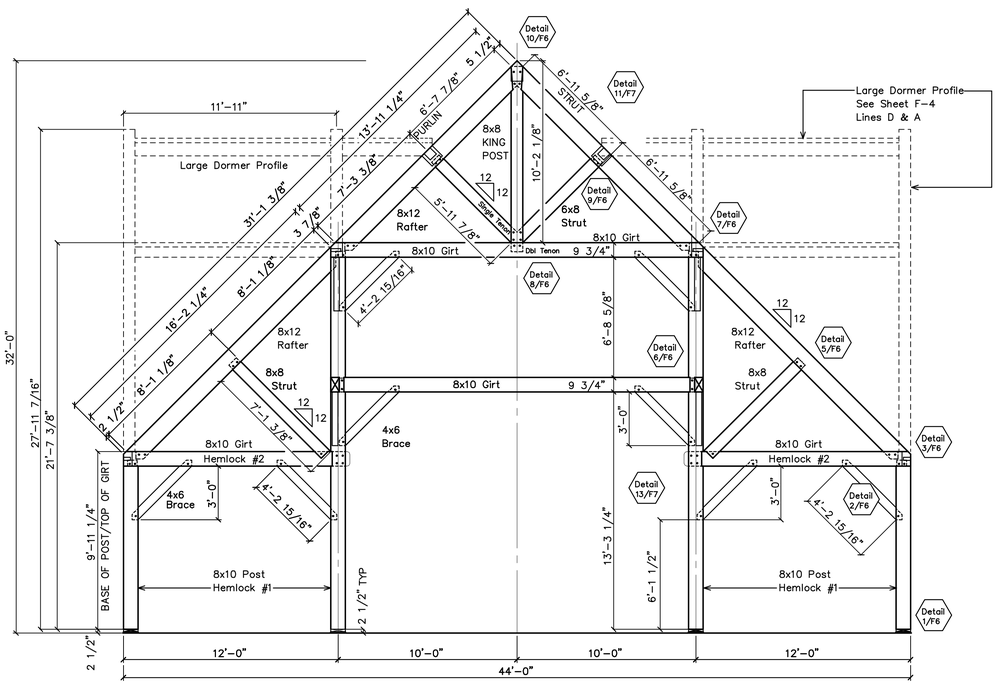

Bents 1 - 3

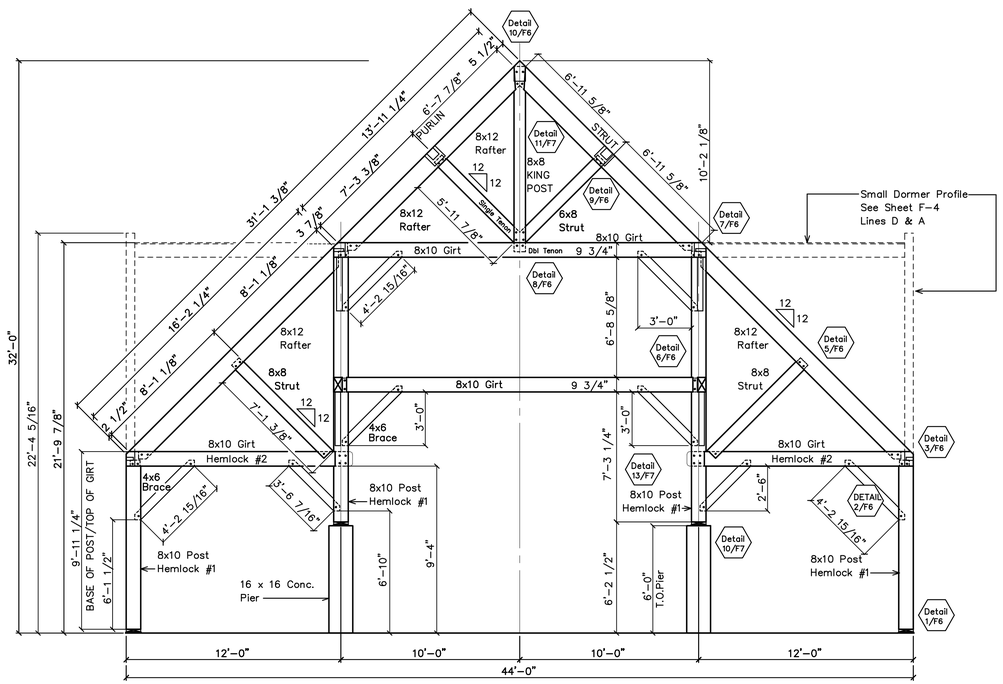

Bents 4 - 7

REVISIONS	BY
10/04/91	

VERMONT TIMBER WORKS
SPRINGFIELD VERMONT
802-885-1917

SHOP DRAWINGS

Bent Profiles

Engineering Ventures
208 Flynn Avenue
Burlington, VT 05401
802-863-6225
802-863-6306 Fax

PROJECT: Susquehanna County Humane Society

DRAWN : D.F.
CHECKED :
DATE : 8/17/01
SCALE : 1/4"=1'-0"
JOB NO. :
SHEET

F-3

OF 7 SHEETS