PLOT DATE 11/16/01

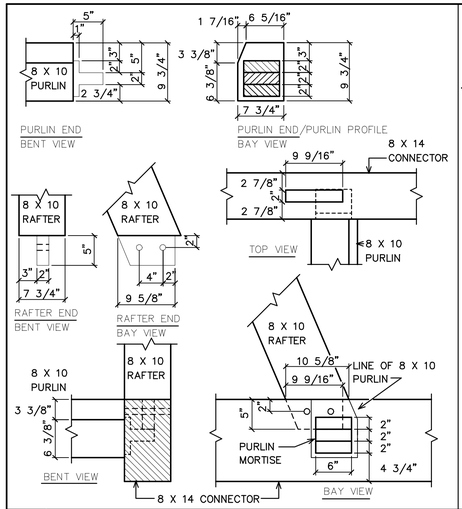

1 LARGE DORMER PURLIN DETAIL

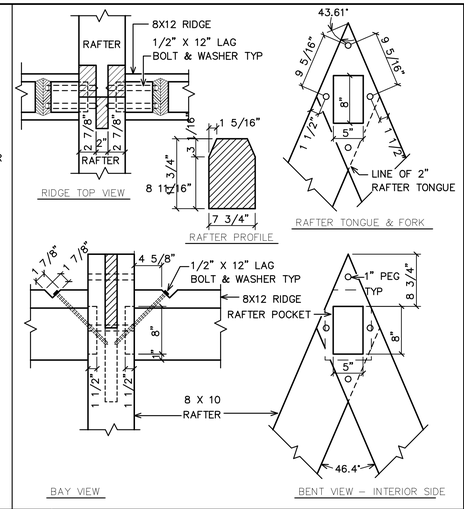

2 LARGE DORMER RIDGE DETAIL

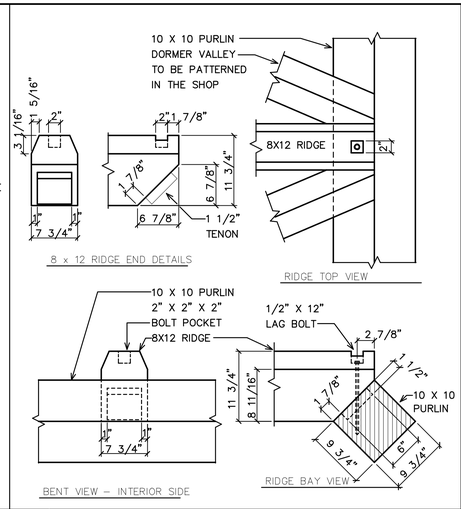

3 LARGE DORMER RIDGE TO PURLIN

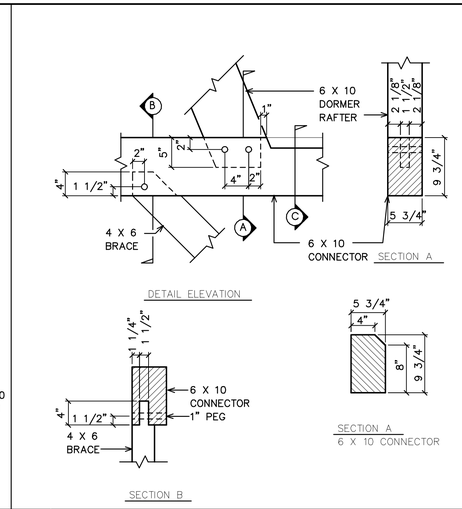

4 SMALL DORMER RAFTER DETAIL

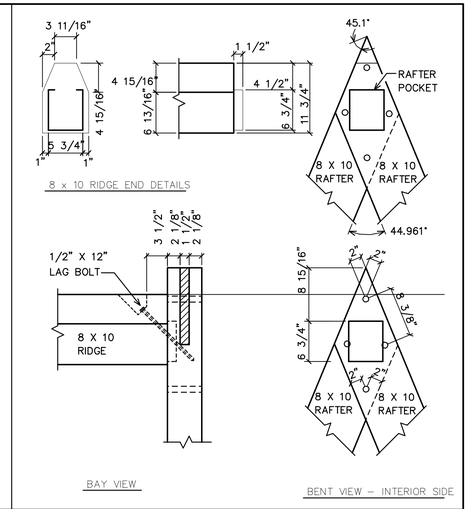

5 SMALL DORMER RIDGE DETAIL

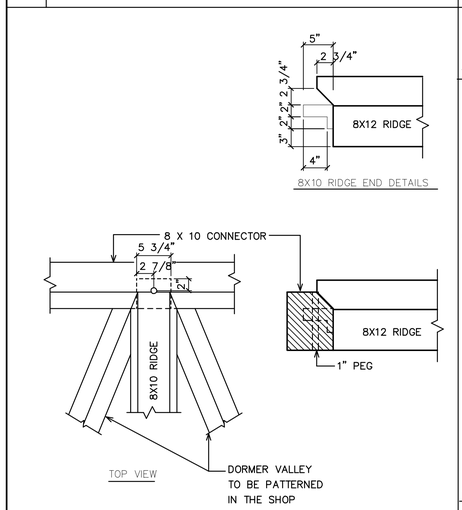

6 SMALL DORMER RIDGE CONNECTOR

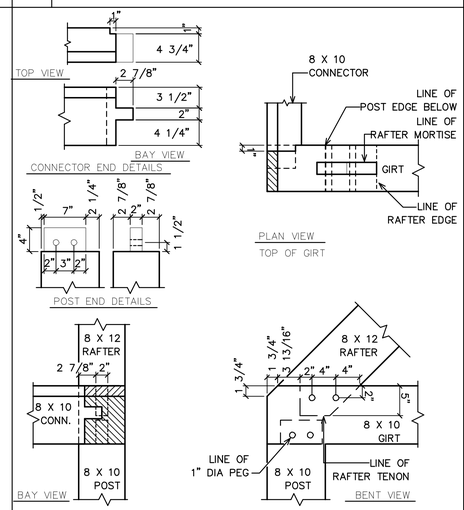

7 BENT 9 RAFTER DETAIL

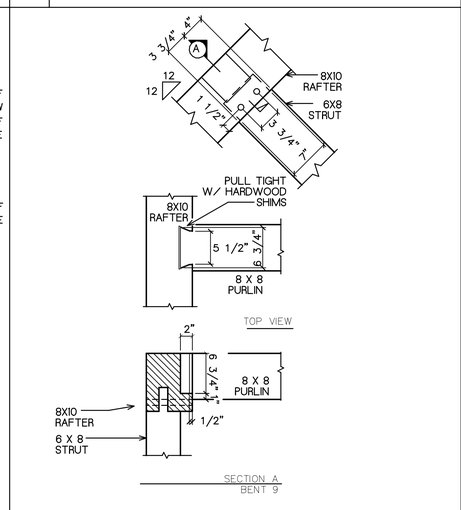

8 BENT 9 RAFTER DETAIL

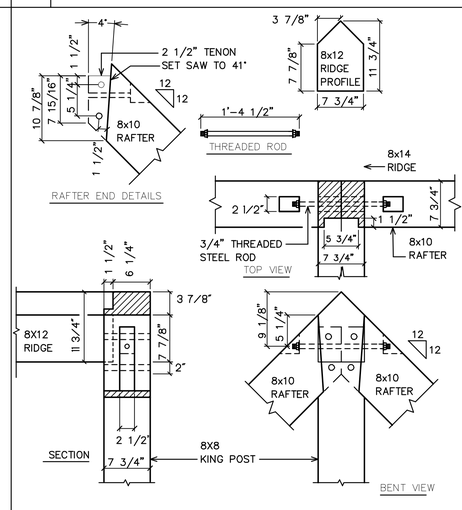

9 BENT 9 RIDGE DETAIL

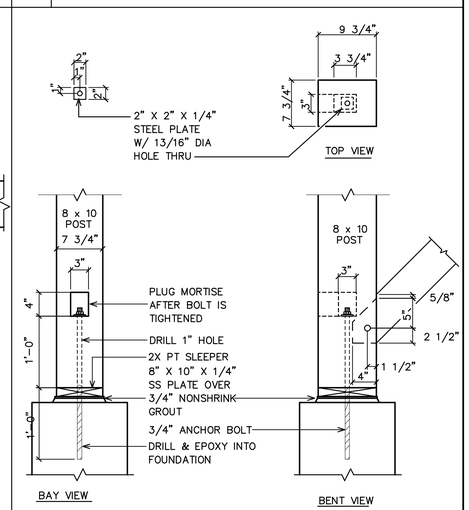

10 POST BASE @ CONCRETE PIER

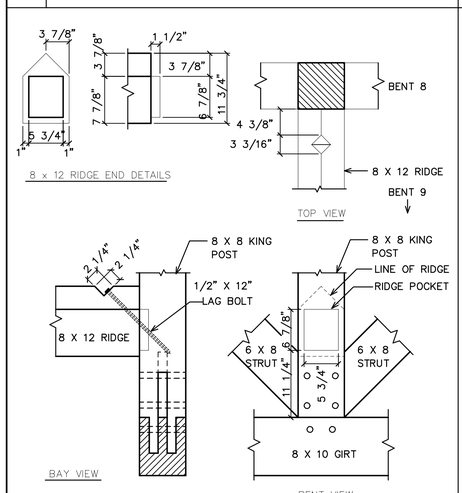

11 BENT 9 RIDGE/KING POST DETAIL

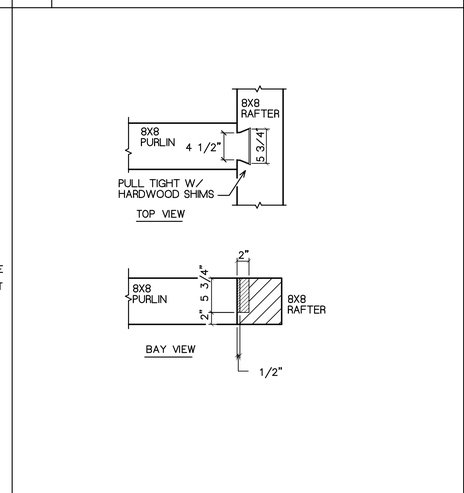

12 PURLIN TO RAFTER CONNECTION

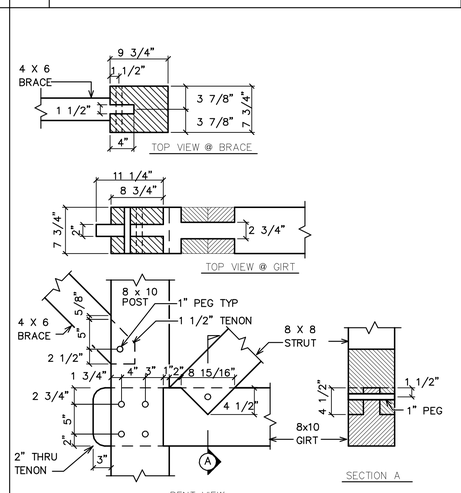

13 POST CONNECTIONS

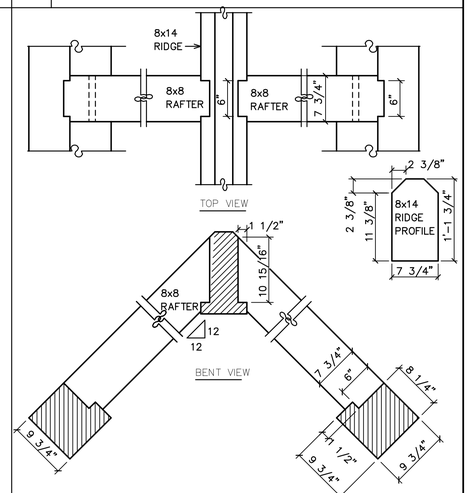

14 CUPOLA RAFTER TO RIDGE DETAIL

REVISIONS	BY
10/04/01	

VERMONT TIMBER WORKS
SPRINGFIELD VERMONT
802-885-1917

SHOP DRAWINGS
Bent Profiles

Engineering Ventures
208 Flynn Avenue
Burlington, VT 05401
802-863-6225
802-863-6306 Fax

PROJECT: Susquehanna County Humane Society

DRAWN : D.F.	CHECKED :
DATE : 8/17/01	
SCALE : 1"=1'-0"	
JOB NO. :	
SHEET F-7	
OF 7 SHEETS	