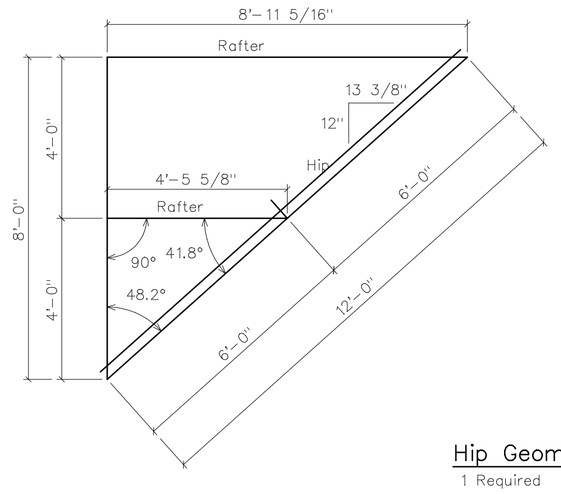

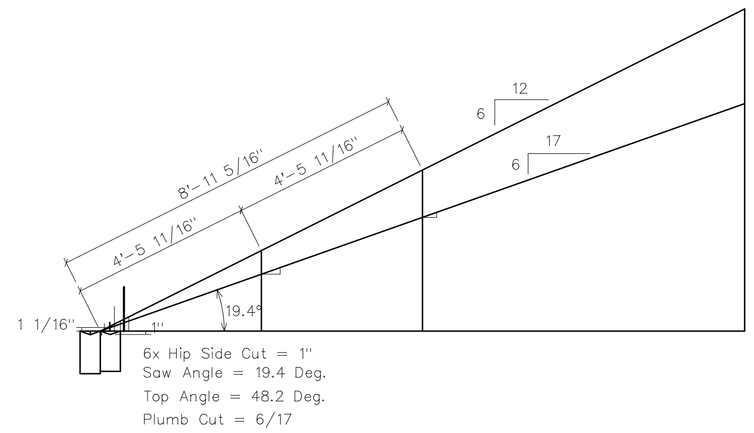

Hip Geometry

1 Required

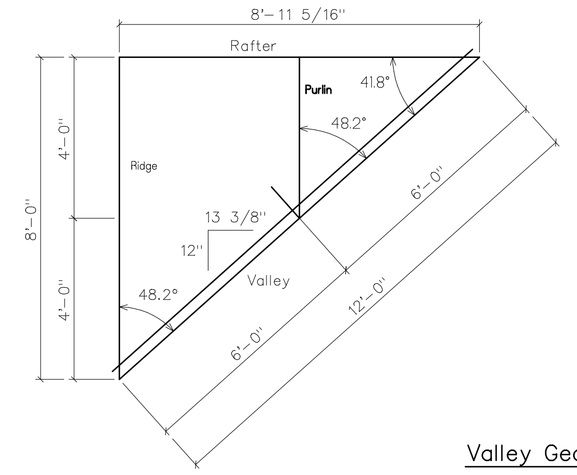

Valley Geometry

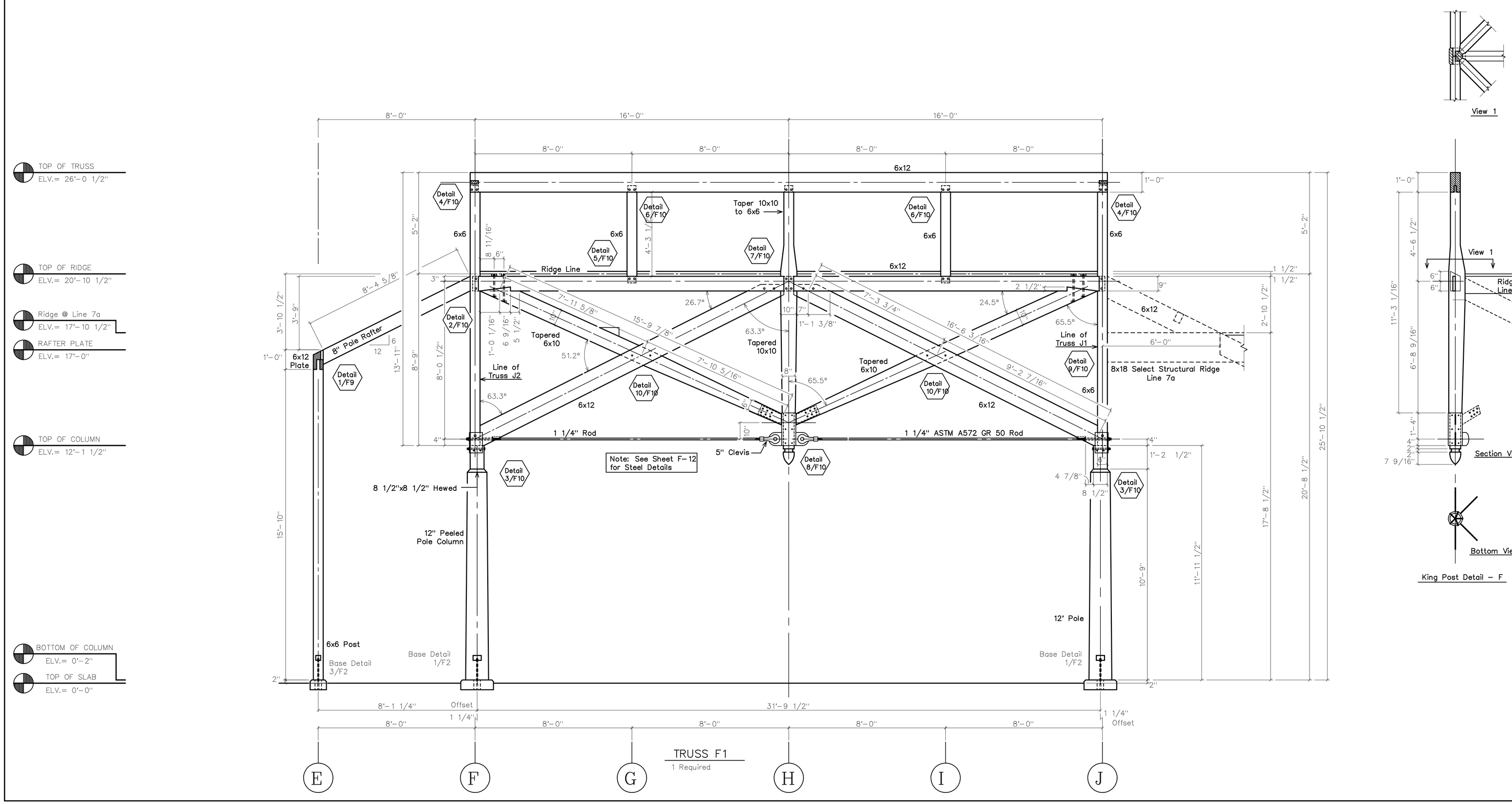

TRUSS F1

1 Required

View 1

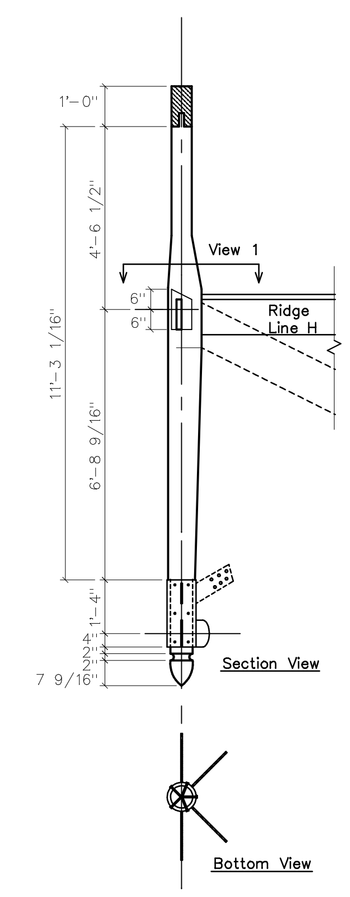

King Post Detail - F

REVISIONS	BY

VERMONT TIMBER WORKS
SPRINGFIELD VERMONT
802-885-1917

SHOP DRAWINGS

TRUSS F2

PROJECT: CAMP ABC
FRESH AIR FUND
FISHKILL, NY

DRAWN : D.F.	CHECKED :
DATE : 7/18/00	
SCALE : 3/8"=1'-0"	
JOB NO. :	
SHEET F-5	
OF SHEETS	