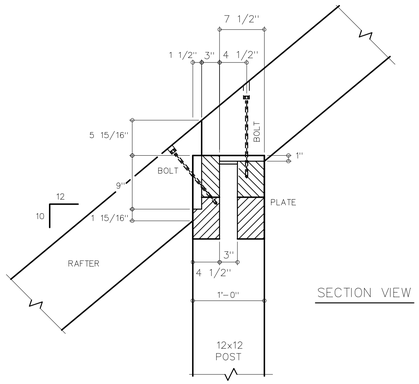

SECTION VIEW

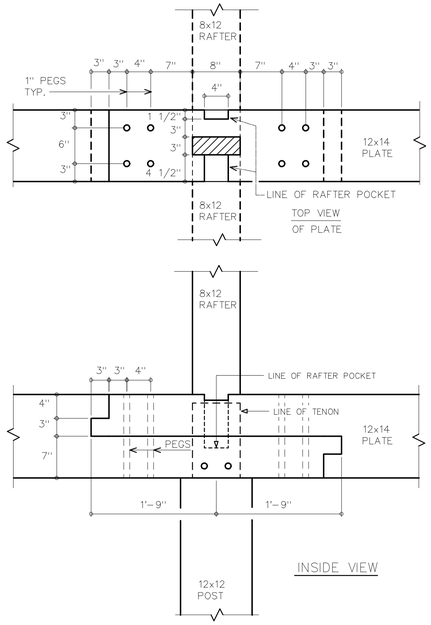

TOP VIEW OF PLATE

INSIDE VIEW

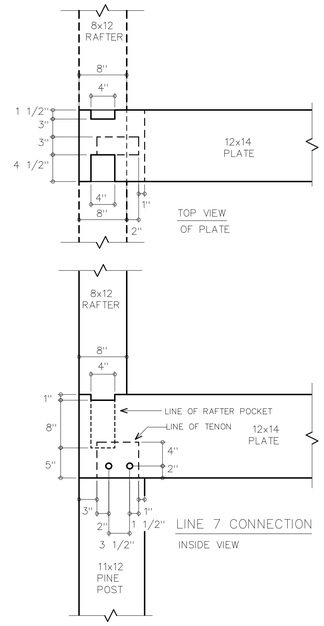

TOP VIEW OF PLATE

LINE 7 CONNECTION

INSIDE VIEW

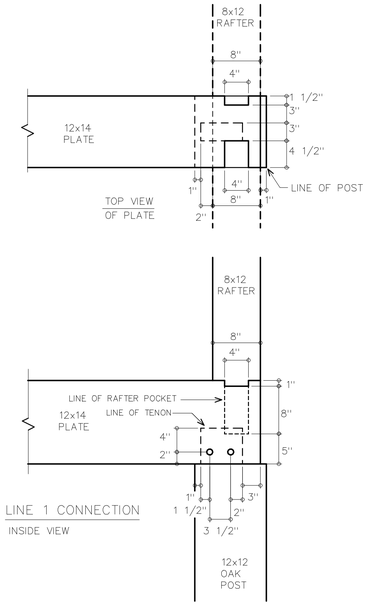

TOP VIEW OF PLATE

LINE 1 CONNECTION

INSIDE VIEW

UPPER PLATE CONNECTIONS

DETAIL #15

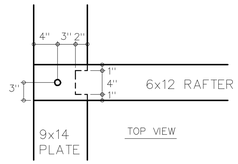

TOP VIEW

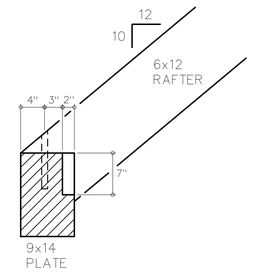

COMMON RAFTER SEAT

DETAIL #16

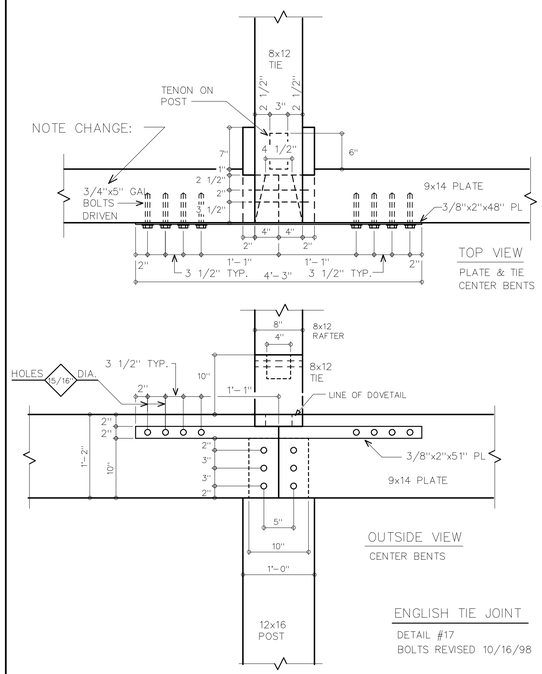

TOP VIEW

PLATE & TIE CENTER BENTS

OUTSIDE VIEW

CENTER BENTS

ENGLISH TIE JOINT

DETAIL #17

BOLTS REVISED 10/16/98

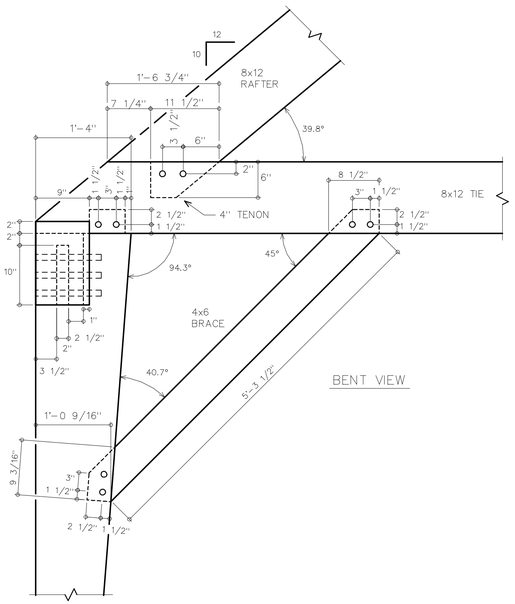

BENT VIEW

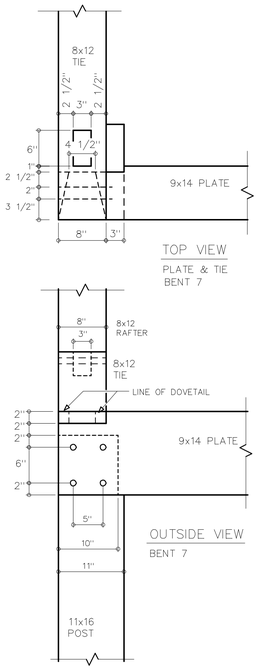

TOP VIEW

PLATE & TIE BENT 7

OUTSIDE VIEW

BENT 7

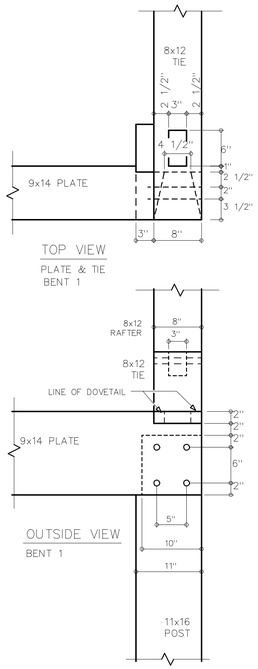

TOP VIEW

PLATE & TIE BENT 1

OUTSIDE VIEW

BENT 1

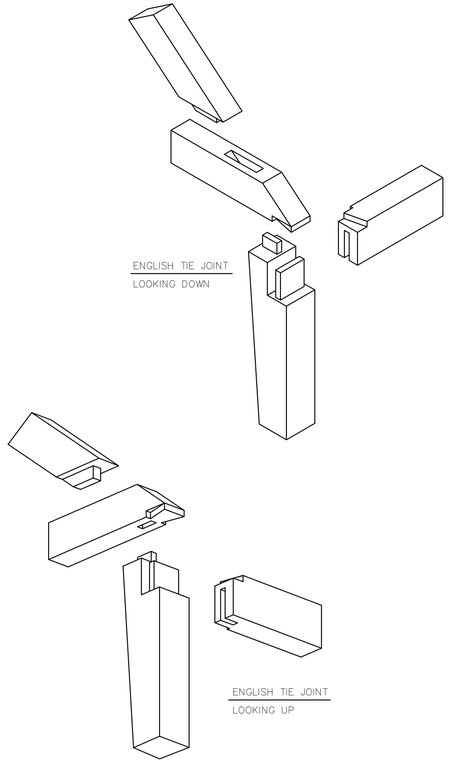

ENGLISH TIE JOINT

LOOKING DOWN

ENGLISH TIE JOINT

LOOKING UP

REVISIONS	BY
9/8/98	

VERMONT TIMBER WORKS
SOUTH LONDONDERRY, VT
802-824-5503

SHOP DRAWINGS

JOINT DETAILS

ARCH: TIMOTHY D. SMITH & ASSOCIATES

ENG: DUFRESNE & HENRY

G.C.: NEAGLEY & CHASE

PROJECT: SOUTHEAST VERMONT WELCOME CENTER
GUILFORD, VERMONT

DRAWN : D.F.	CHECKED :
DATE : 8/15/98	
SCALE :1 1/2"=1'-0"	
JOB NO. :	
SHEET F-14	
OF	SHEETS