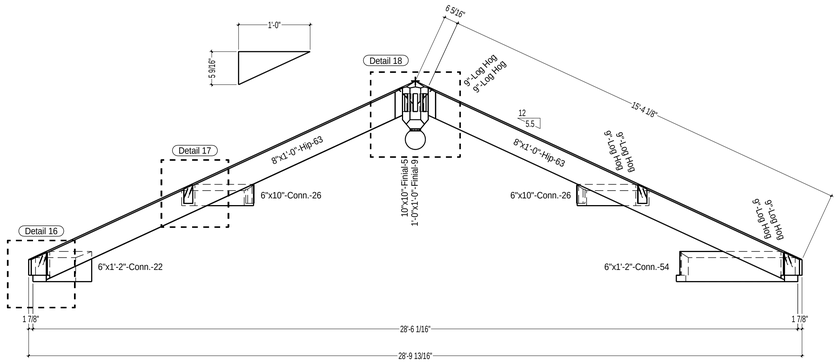

Sun Room Truss

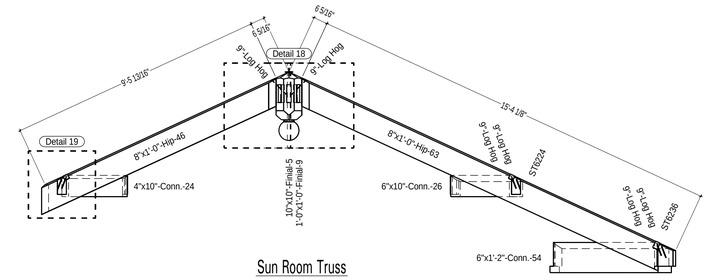

Sun Room Truss

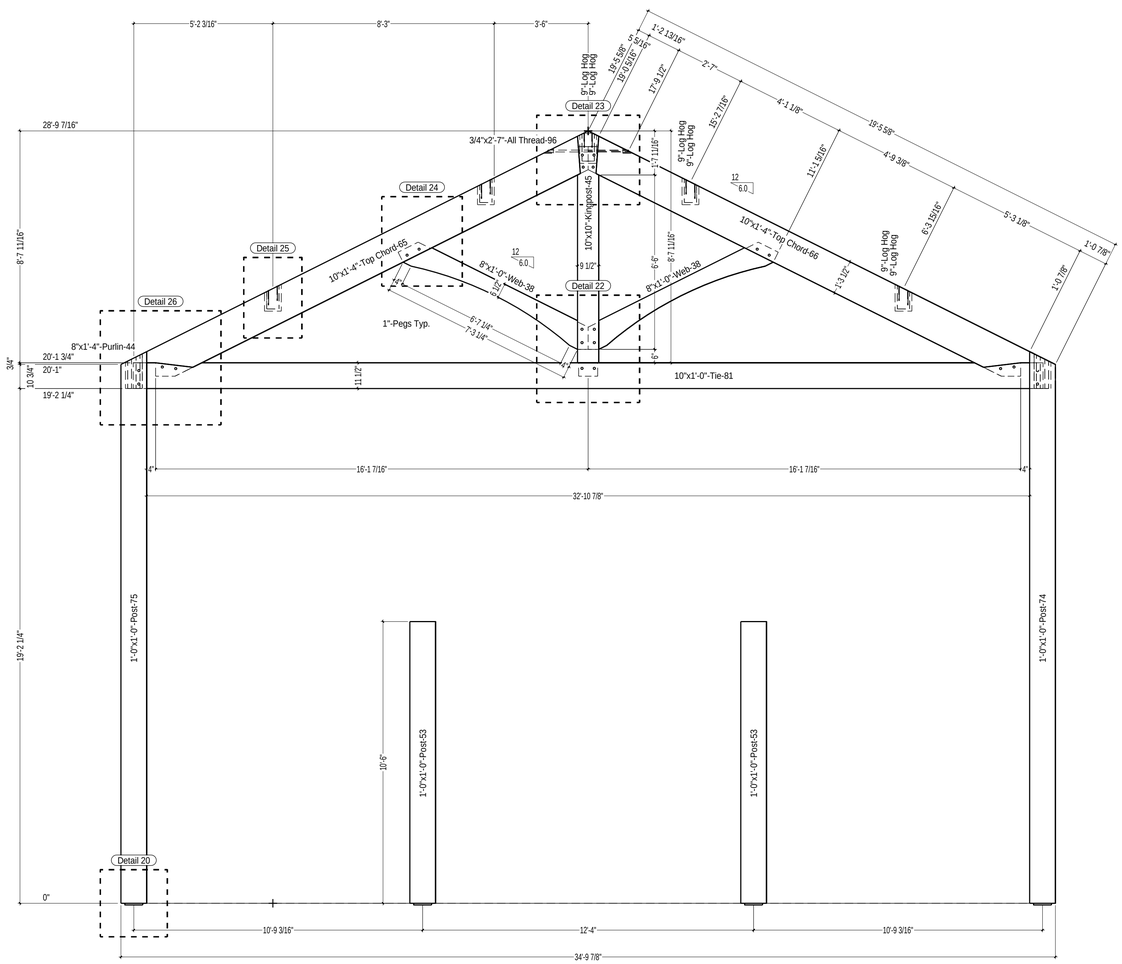

Great Room Truss A

Great Room Truss A

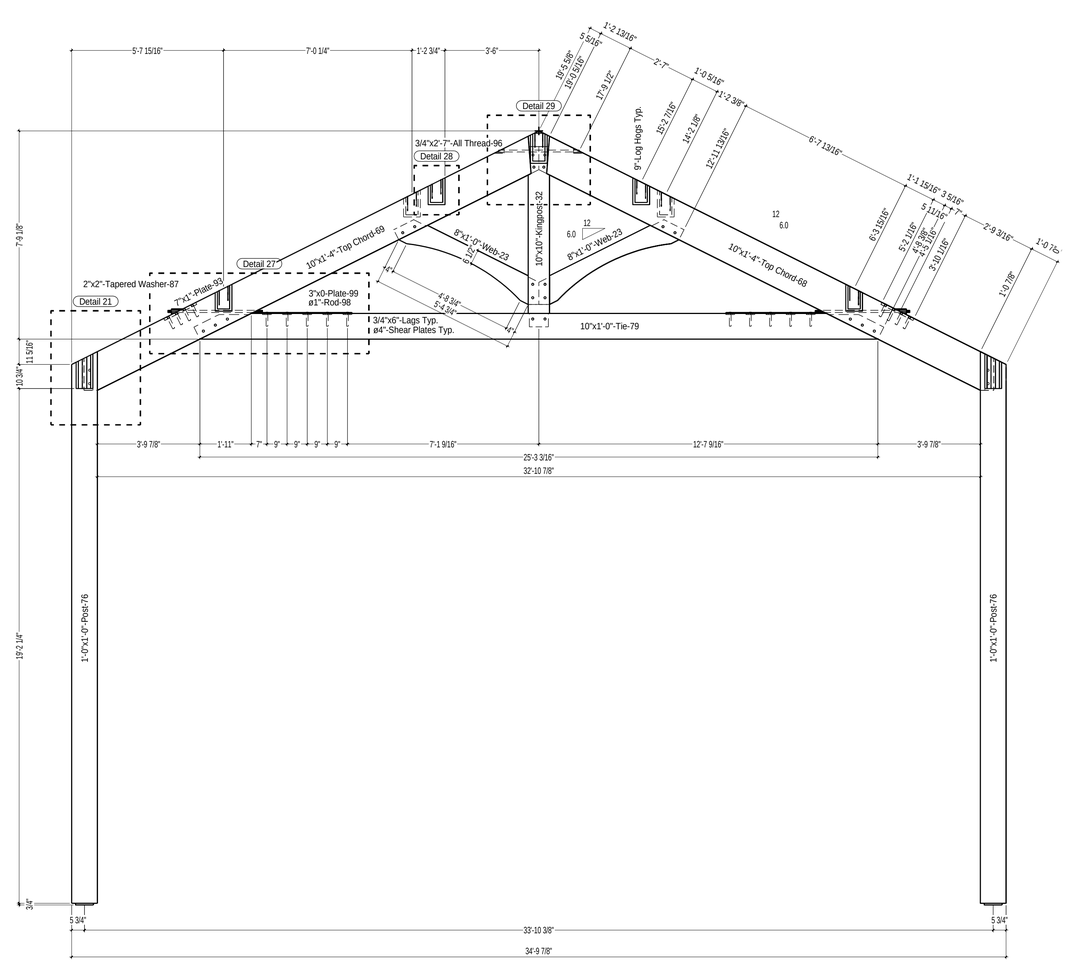

Great Room Truss B

3 - Required

VERMONT TIMBER WORKS INCORPORATED

36 Fairbanks Road
North Springfield, Vermont
802.886.1917 - 802.886.6188 fax
www.vermonttimberworks.com

THE ENGINEERING ADVICE, OPINIONS, AND RECOMMENDATIONS IN THIS DRAWING ARE THOSE OF THE LICENSED PROFESSIONAL ENGINEER WHOSE STAMP APPEARS HEREIN, AND NOT THOSE OF VERMONT TIMBER WORKS, INC.

Truss Elevations
Bent Profiles
Rafter Tails

Project: Hostetter-Habib Residence
Timber Frames
Holmes, NY

Drawn By: DF
Checked By: XX
Scale: 3/8" = 1'-0"
Date: 5/7/10
Plot Date: 06-03-10

REVISIONS	BY	CHECKED BY
05/11/10	DF	XX

SHEET

F-3

COPYRIGHT VERMONT TIMBER WORKS, INC.
THIS DRAWING MAY BE UTILIZED ONLY FOR THE WORK SHOWN HEREIN AT THE SITE SPECIFIED. ANY OTHER USE OF THIS DRAWING INCLUDING, WITHOUT LIMITATION, ANY REPRODUCTION OR ALTERATION OF THIS ARCHITECTURAL WORK WITHOUT THE PRIOR WRITTEN APPROVAL OF VERMONT TIMBER WORKS, INC. IS A VIOLATION OF LAW AND PROHIBITED