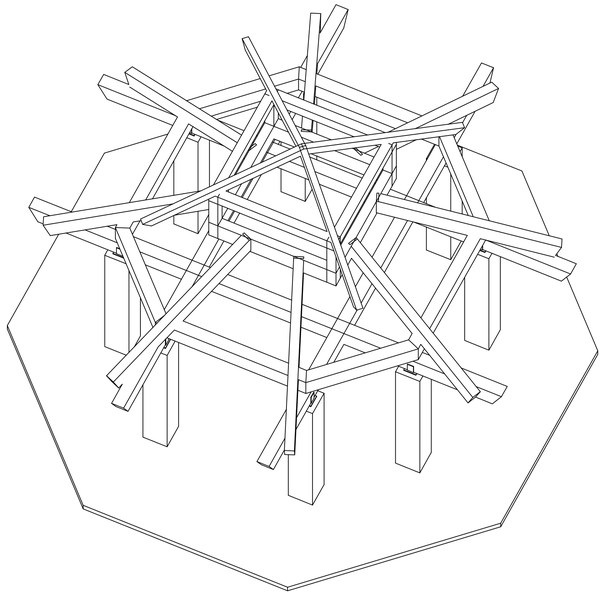

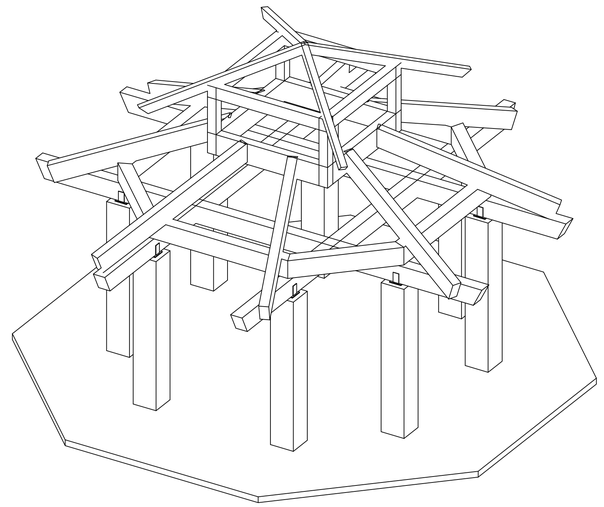

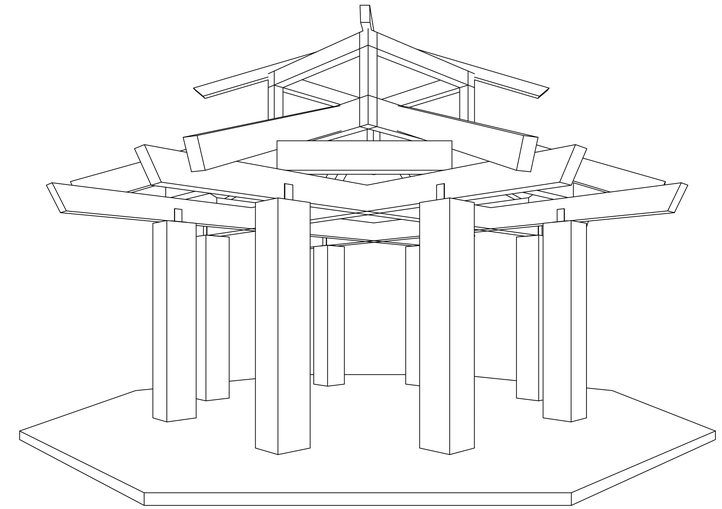

General Notes:

Timbers to be Douglas Fir #1 & Full Sawn S4S
Pegs to be 1" birch.
All edges to have 1/2" chamfer
One coat of stain, oil or urethane to be shop applied on all sides.
All Bolts to be galvanixed Grade A307.
All Steel to be A36 and to be galvanized.

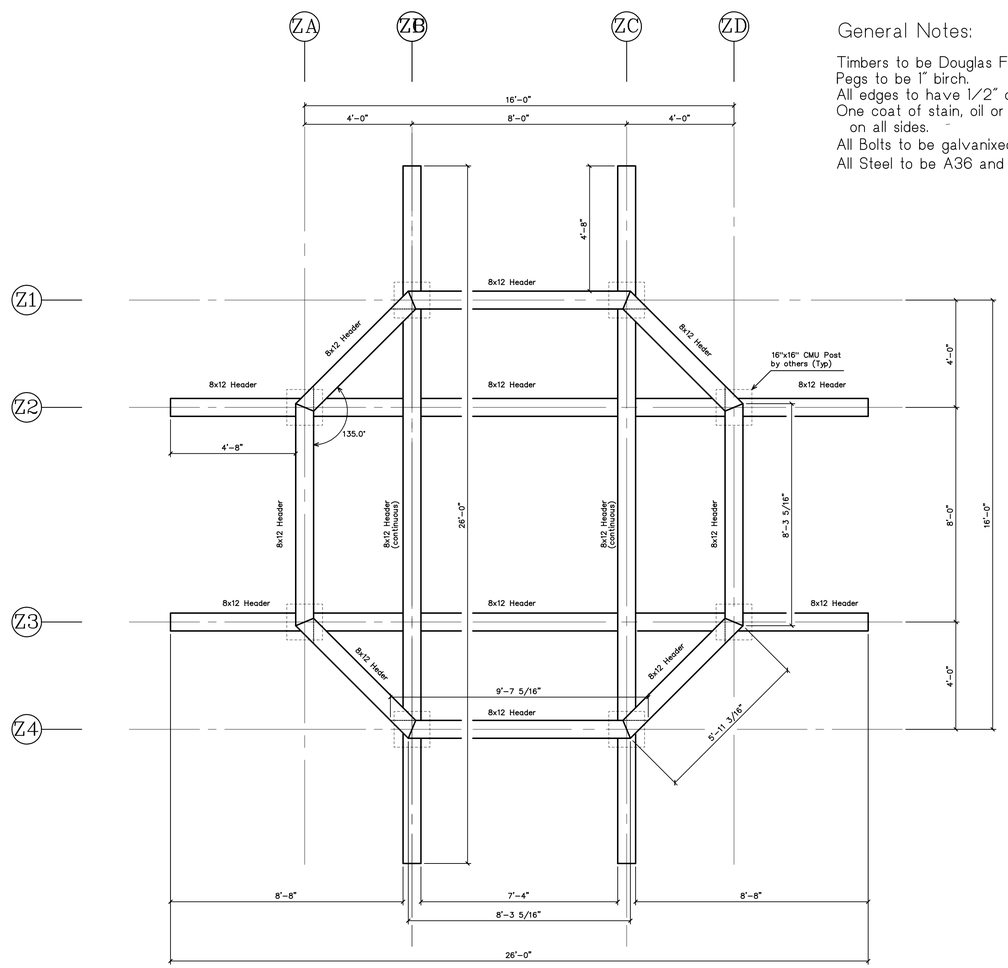

Base Level Framing Plan

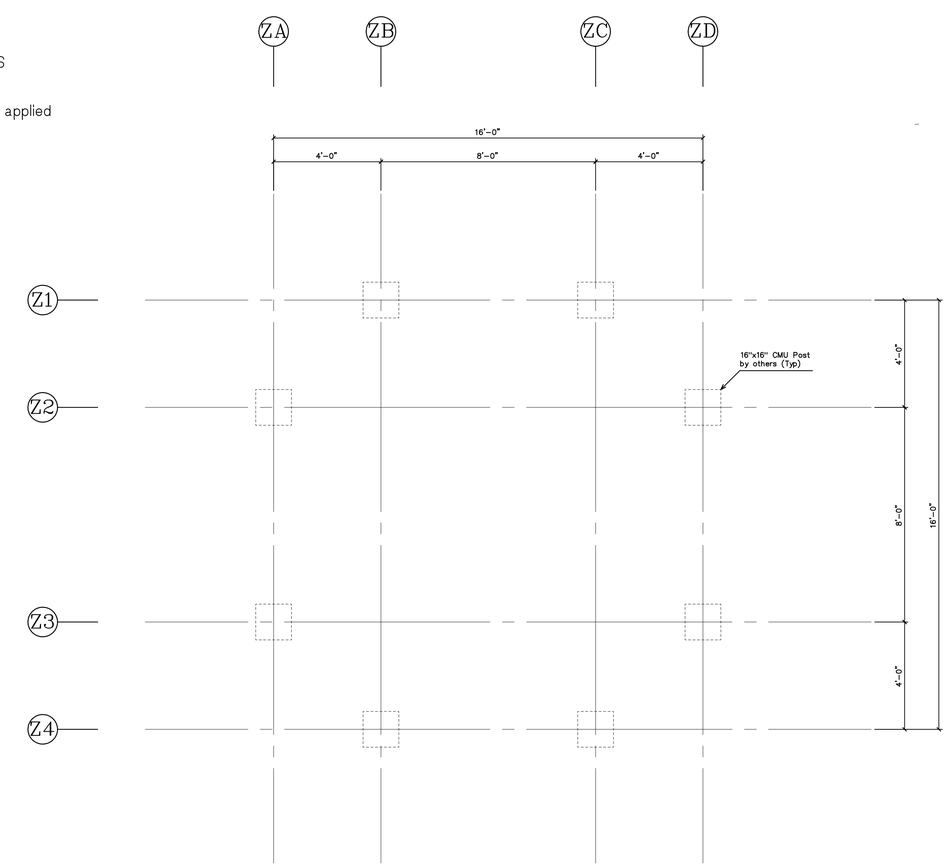

Pier Layout

REVISIONS	BY
4/4/06	PJZ
4/10/06	PJZ

RED LINE CHECK
BY: DATE:

VERMONT TIMBER WORKS
SPRINGFIELD VERMONT
802-886-1917

SHOP DRAWINGS
Post Layout
Framing Plan
Perspective

ISSUED FOR:
Fabrication

PROJECT:
Citizen's Park
Barrington, IL
Gazebo

DRAWN : PJZ
CHECKED :
DATE : 1/10/06
SCALE : 3/8"=1'-0"
JOB NO. :
SHEET
F-1
OF SHEETS